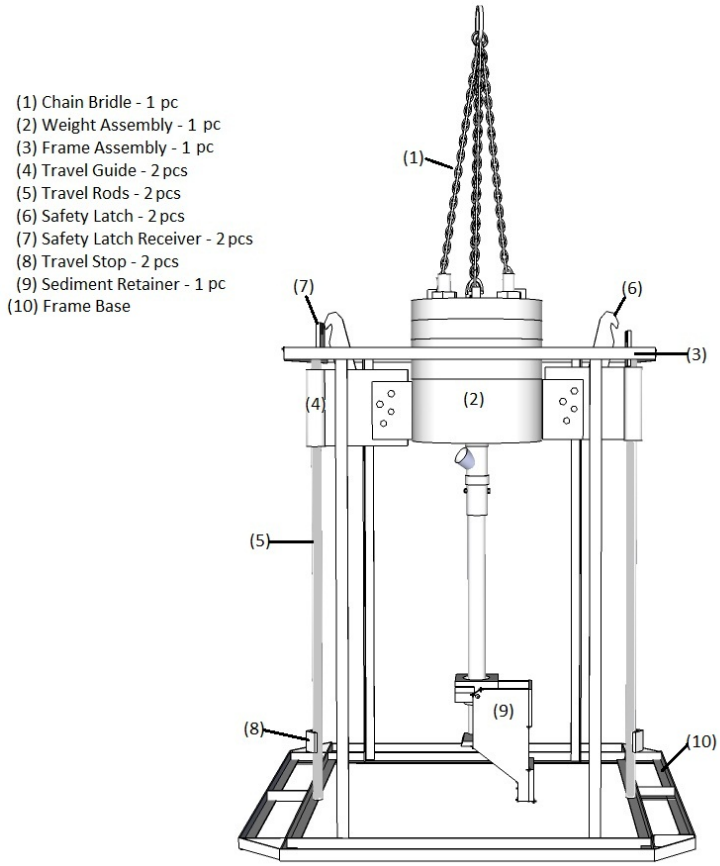

Figure 1. Diagram of the modified gravity sediment corer and frame assembly.