Moving biodeposition measurements of shellfish feeding from a shore-based to a shipboard technology

Mark Dixon, Bob Alix, Werner Schreiner, Julie Rose, Judy Li, Gary Wikfors: NOAA/MNFS Milford, CT

Eve Galimany: Institut de Ciencies del Mar Barcelona , Spain

Heather Refalo: Saint Vincent's College, School of Nursing, Bridgeport, CT

Monstre 3.0

(Monsters 3.0)

Shellfish Aquaculture

- Big Business
- Food Source
- Sustainable
- Restoration
- Ecosystem Services
- Established BMPs
- Political Support
- Moving Offshore
- NOAA Involvement

Shellfish Aquacutlure

- Business Model
- Species
- Permitting
- Life-Cycle considerations
- Site Selection

Site Selection

- Location
- Access
- Species
- Bottom
- Gear considerations
- Permitting constraints
- Lease Availability
- Anecdotal Growth information

Biodeposition Method of Measuring Shellfish Feeding

- Direct, *In-situ* measurements
- Water quality measurements
- Shellfish filtering, assimilation, and efficiency
- Integrated approach
- Portable
- Powerful data set
- Galimany et al 2011, Aquaculture 314: 236–243.

Feces

Pseudofeces

Water

Comparative Study
Milford vs. Bronx River

		Clearance Rate (L h^{-1})*	Filtration Rate (mg h^{-1})	Rejection Prop. (%)*	Absorption Rate (mg h^{-1})*	Absorption Efficiency
Milford (CT)	Average	2.38±0.10	12.50±0.46	35.62±1.50	3.25±0.18	0.71±0.01
Hunts Point (NY)	Average	1.61±0.10	13.68±0.93	59.84±1.97	1.39±0.09	0.71±0.01

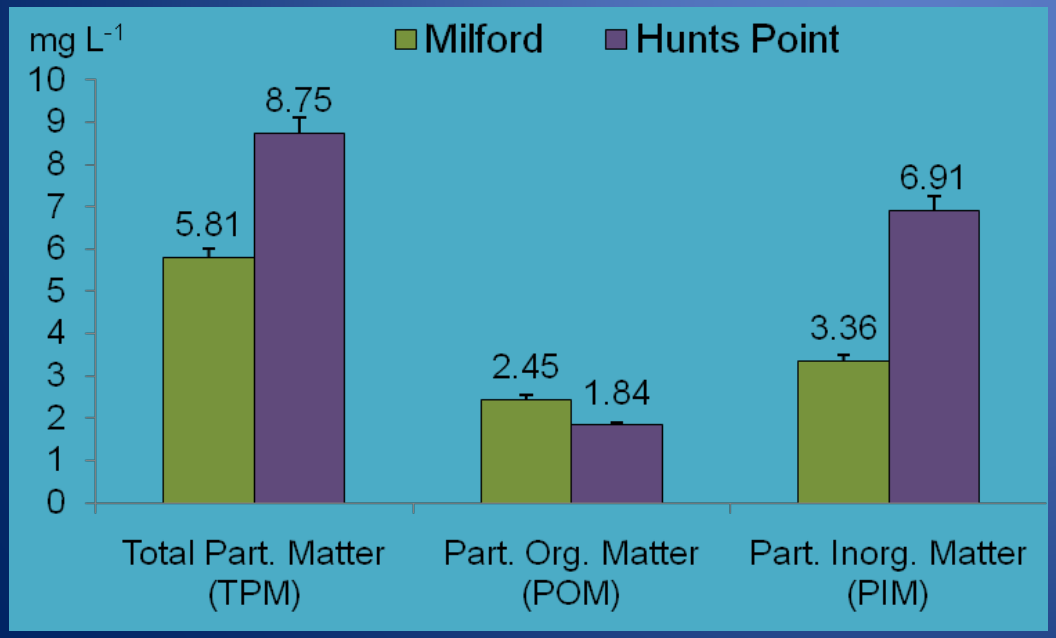

% Organic content	
Milford	43.38±0.97
Hunts Point	22.58±0.45

Comparison cont.

- Seston composition very different
- Mussels demonstrate adaptive filtering behavior
- But at a cost to the Bronx mussels
- Galimany et al 2013, Estuaries and Coasts (2013) 36:1265–1273

Biodeposition Method

- Relies on precise and constant flow of water through experimental chambers
- Level surface
- Stable platform
- 5+ hours star-to-finish
- Shellfish Aquaculture generally remote from these types of conditions

Monsters 3.0

- Function offshore on a vessel
- Modular
- Transportable
- Rugged
- Maintain all the data collection capabilities of earlier designs

Gimbal

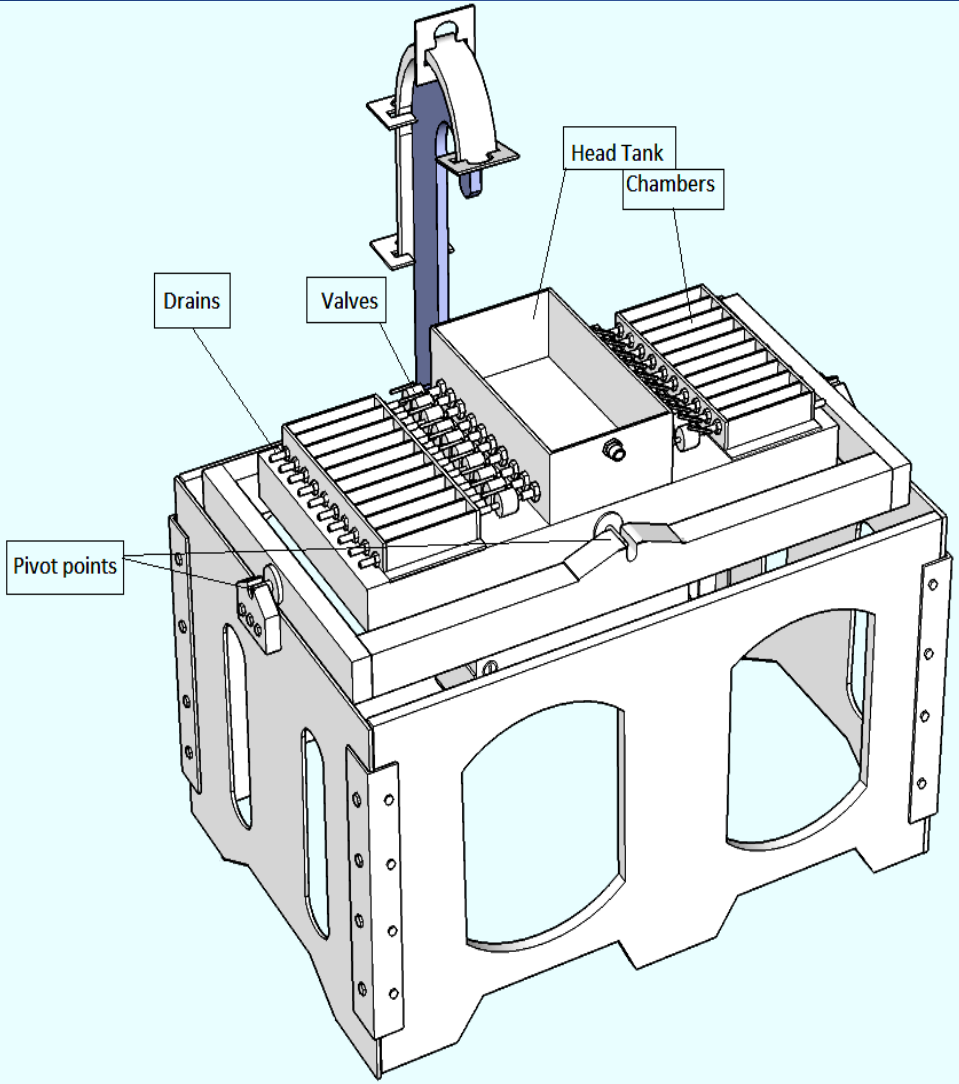
Head Tank
Chambers
Drains
Valves
Pivot points

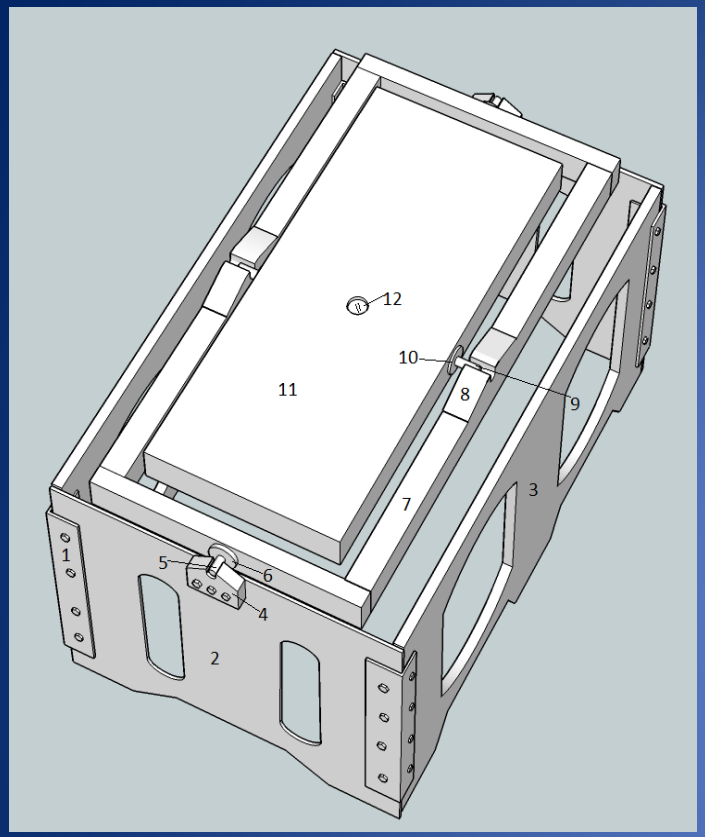
12
10
11
8
9
7
3
1
5
6
4
2

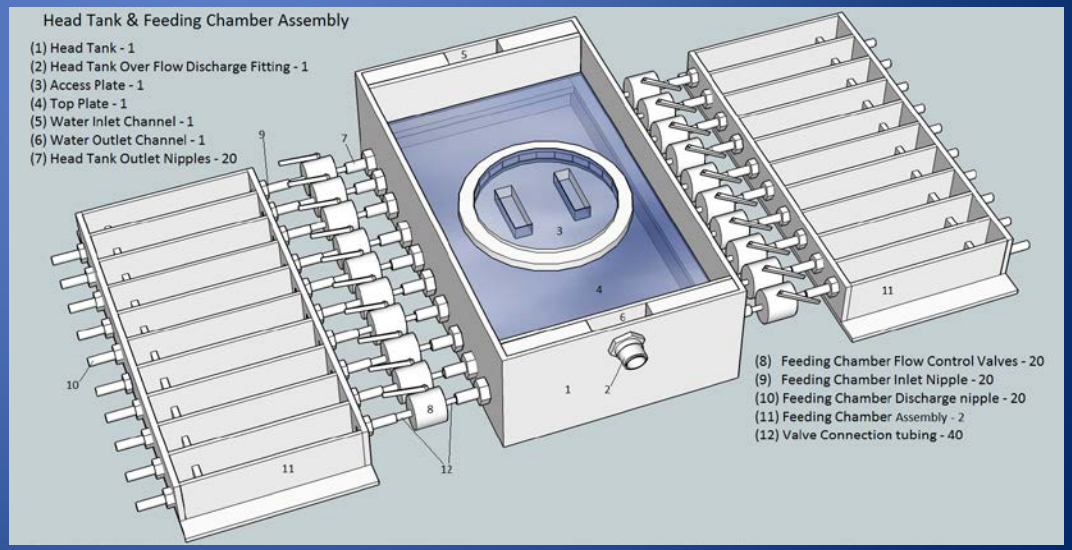
Head Tank & Feeding Chamber Assembly
(1) Head Tank - 1
(2) Head Tank Over Flow Discharge Fitting - 1
(3) Access Plate - 1
(4) Top Plate - 1
(5) Water Inlet Channel - 1
(6) Water Outlet Channel - 1
(7) Head Tank Outlet Nipples - 20
(8) Feeding Chamber Flow Control Valves - 20
(9) Feeding Chamber Inlet Nipple - 20
(10) Feeding Chamber Discharge nipple - 20
(11) Feeding Chamber Assembly - 2
(12) Valve Connection tubing - 40

Warning!

The following slides may be disturbing to Landlubbers

Clinometer
Optical Illusion

In Action

Field Studies: Summer 2013

- Take Biodeposotion measurements directly into the field
- Work “offshore” on a vessel
- Study waters where shellfish aquaculture is taking place or proposed
- Site Selection Tool
- Nutrient Bioextraction Metric

Summer 2013

- Long Island Sound: June, Outside of Milford Harbor, proof of concept, comparison to Milford Harbor
- MA: July, Off of Martha's Vineyard, American Mussel Harvesters
- CA: August, San Pedro Shelf, Catalina Sea Ranch

Total Particulate Matter mg/L

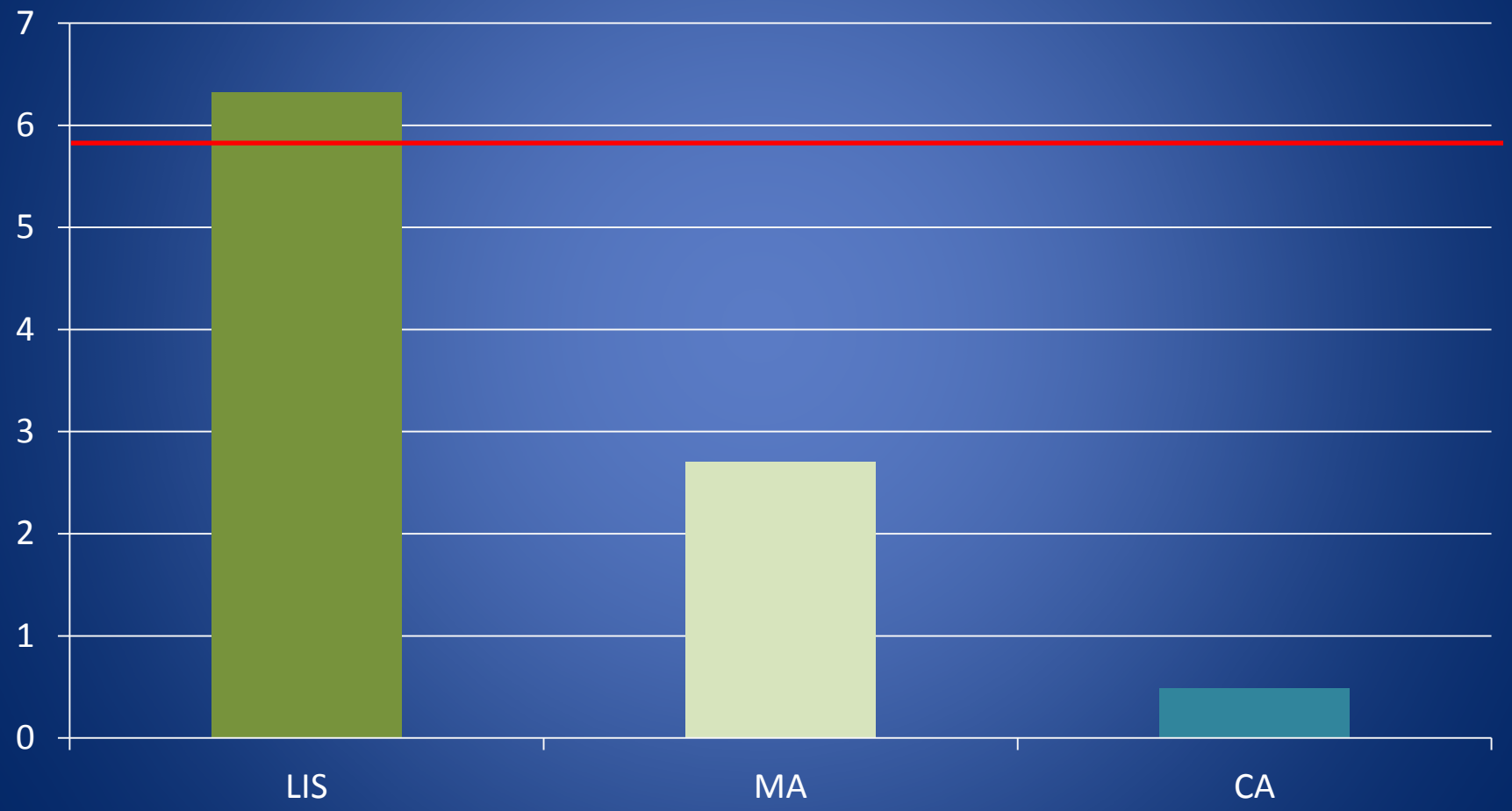

Percent Organic

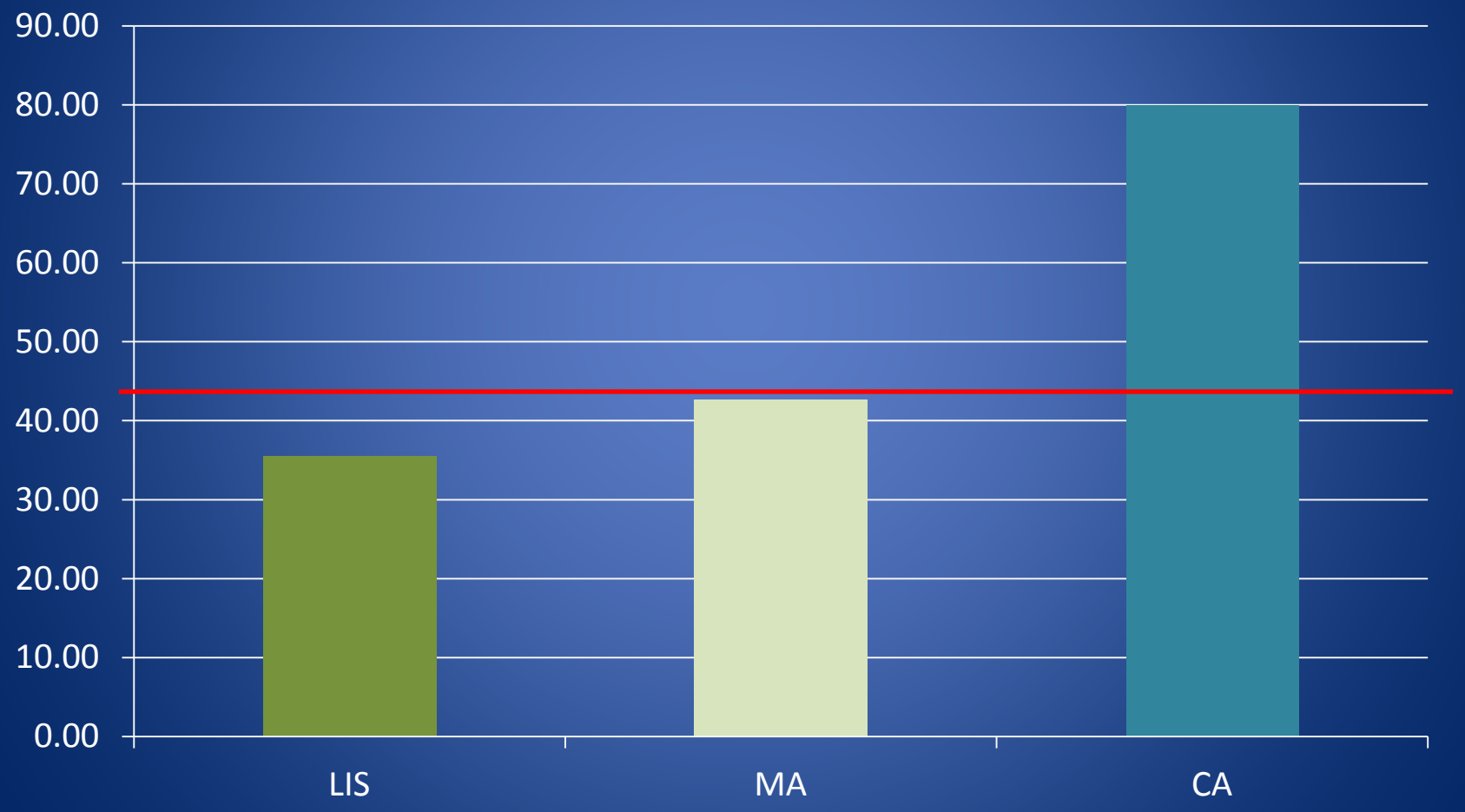

Absorption Rate
Organic Matter mg/h

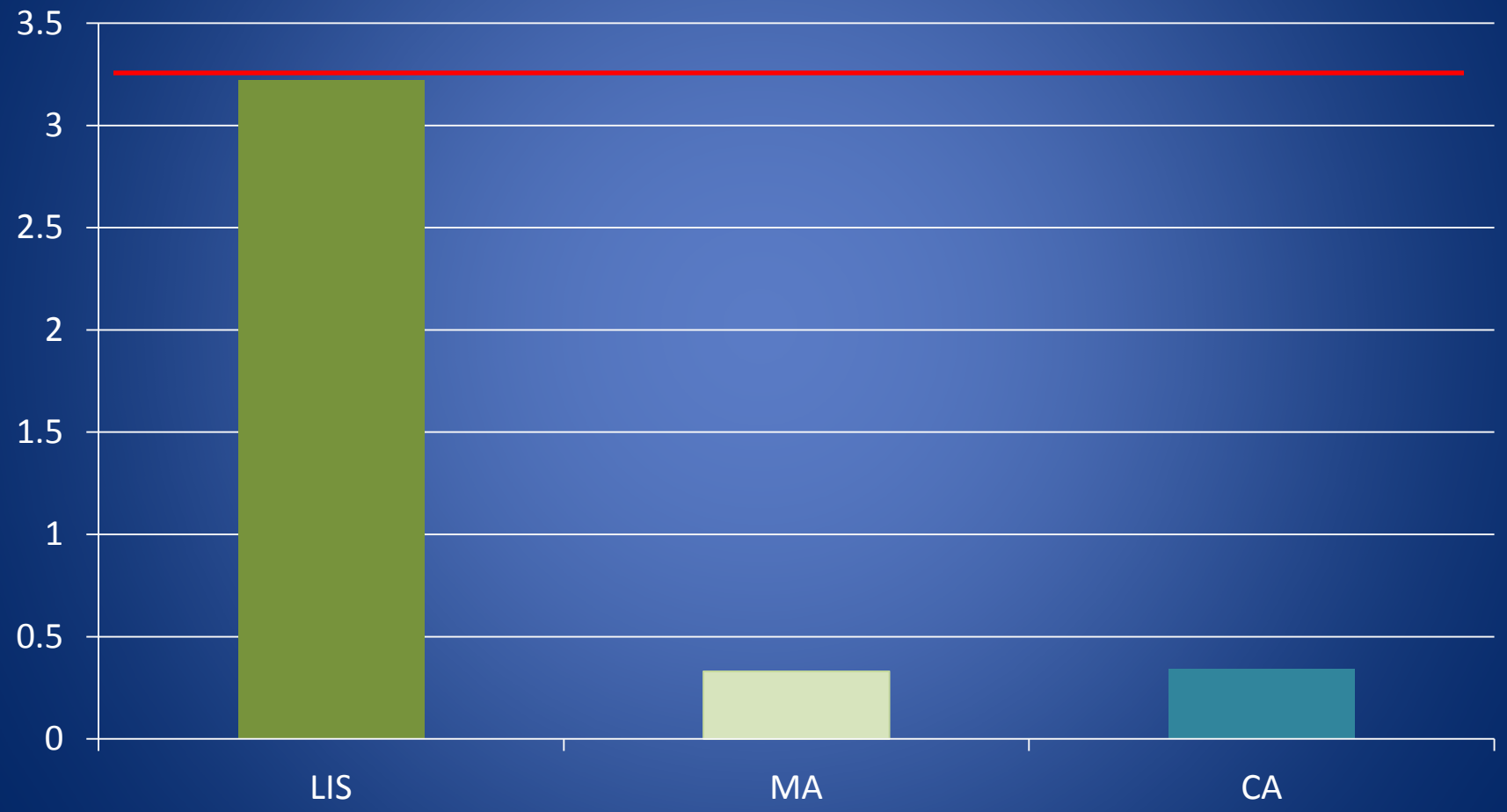

Absorption Efficiency

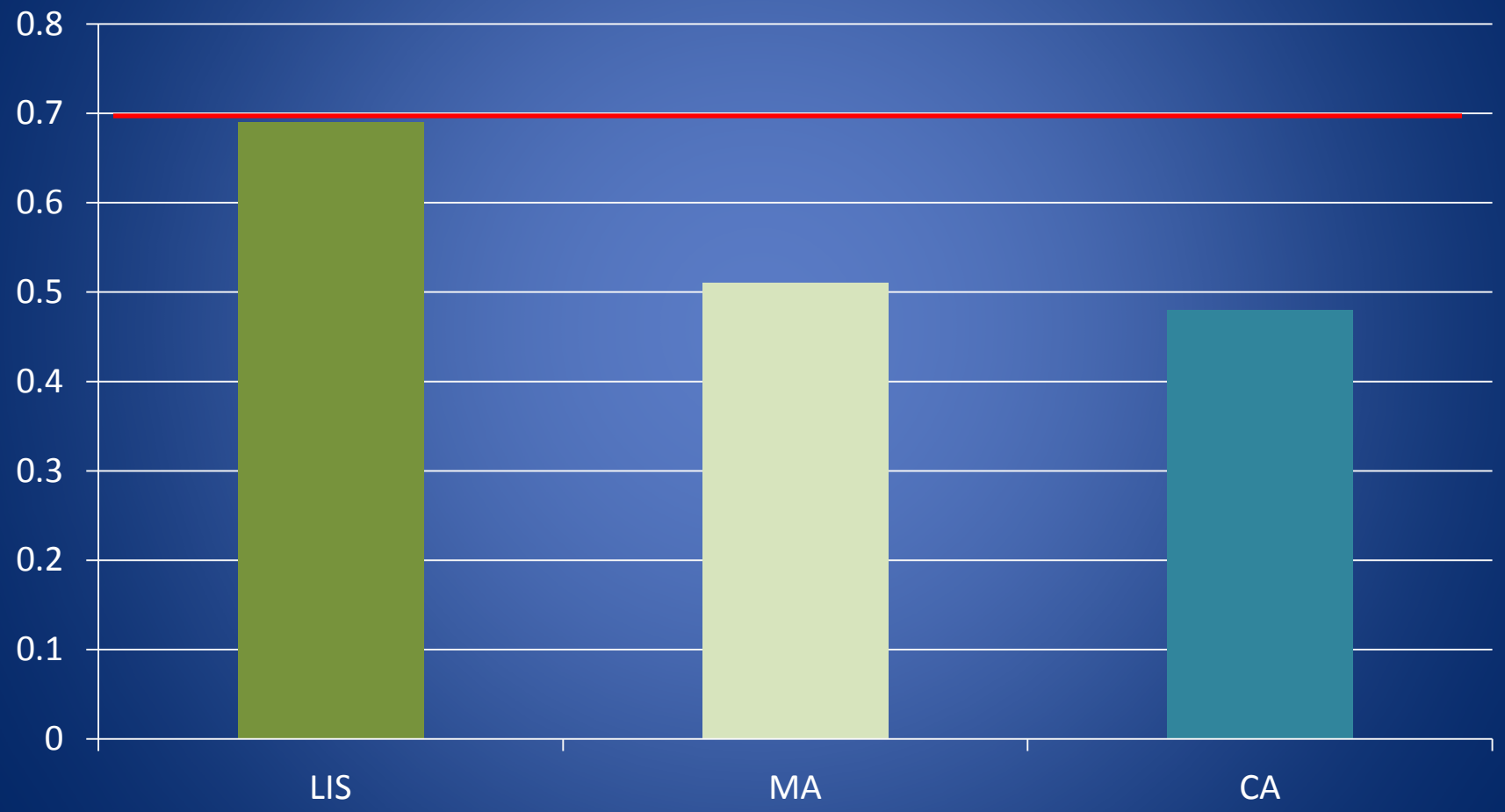

Summary

- LIS site, and mussel feeding, very similar to Milford dockside study
- MA: “blue water”, lower TPM and higher % organic than LIS, low absorption rate, and moderate absorption efficiency
- CA: even “bluer water”, very low TPM, but very high % organic, low absorption rate, and moderate absorption efficiency

Value of the Tool: Site Selection

- Real data taken directly at aquaculture site
- Adaptable to multiple species
- Adaptable to multiple types of sites
- Plasticity of target species to adapt to growing conditions can be measured
- Cost savings prior to lengthy permitting process and costly pilot-scale projects
- Data for regulatory agencies

Value of the Tool: Nutrient Bioextraction

- Direct measurements in the field, as opposed to “oyster in a box on a lab bench”
- Relevant data for modeling
- Offshore shellfish aquaculture in Federal Waters
- NOAA’s role in developing tools to quantify aquaculture and environment interaction in Federal Waters
- Relevant data for nutrient trading markets

Acknowledgements

- Many interns, contractors, and visiting scientists who assisted in the field work
- Scott Lindell
- WHOI boat program
- Catalina Sea Ranch
- NOAA Aquaculture Program

Questions

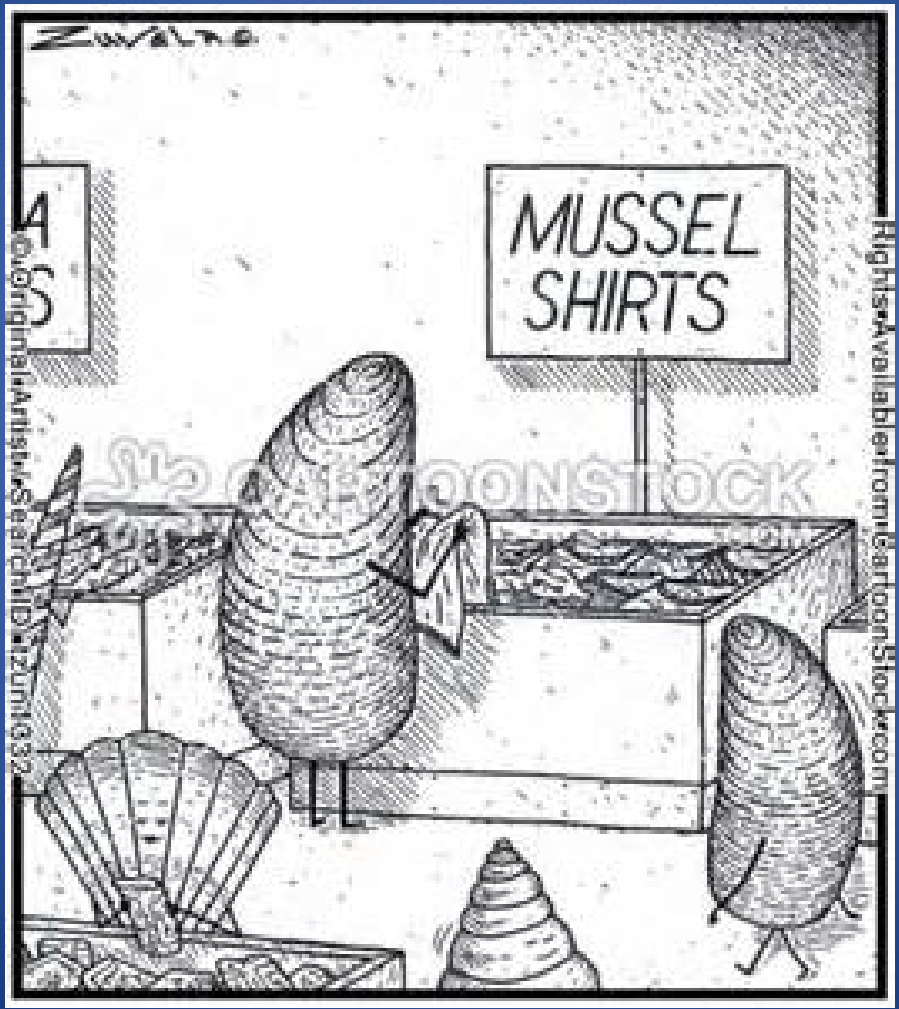
MUSSEL
SHIRTS
CARTOONSTOCK
Rights Available from CartoonStock.com