CHAPTER XI

THE CIRCULATORY SYSTEM AND BLOOD

	Page
General characteristics	239
The pericardium	239
The heart	240
Physiology of the heart	242
Automatism of heart beat	242
The pacemaker system	245
Methods of study of heart beat	247
Frequency of beat	248
Extracardiac regulation	250
Effects of mineral salts and drugs	251
Blood vessels	253
The arterial system	253
The venous system	254
The accessory heart	258
The blood	259
Color of blood	261
The hyaline cells	261
The granular cells	262
Specific gravity of blood	265
Serology	265
Bibliography	266

A heart, arteries, veins, and open sinuses form the circulatory system of oysters and other bivalves. The sinuses, or lacunae, are irregular spaces of varying size in the tissues and have no walls of their own other than the surrounding connective tissue. They are interposed between small arteries and veins and function in place of the capillaries of vertebrates. Blood cells are not confined to the vessels; they wander throughout the tissues, aggregating in the sinuses. A large number of them accumulate on the surface of the mantle and gills and are discarded. Diapedesis, i.e., slow bleeding through the surface of the body, is a continuous and normal process which is accelerated by adverse conditions, by injuries to the tissues, and by removal of an oyster from its shell.

The open sinuses within the circulatory system present a mechanical puzzle. It is difficult to visualize how the pressure of the systolic contraction forces the blood to leave the open spaces and enter the venal system, which has no valves, go through a complex net of branchial vessels and finally enter the heart. To a great extent the mechanical deficiency of the circulatory system is compensated by the pulsating vessels of the mantle and by the contractions of two accessory hearts on the walls of the cloacal chamber. The pulsations of these organs are independent of the beating of the principal heart, and their primary function is to oscillate the blood within the pallial sinuses.

THE PERICARDIUM

The heart is located in the pericardium, a thin-walled chamber between the visceral mass and the adductor muscle (fig. 71). In a live oyster the location of the heart is indicated by the throbbing of the wall of the pericardium on the left side. Here the pericardium wall lies directly under the shell. On the right side the promyal chamber extends down over the heart region and the mantle separates the pericardium wall from the shell.

The cavity in which the heart is lodged is slightly asymmetrical; on the right side it extends farther along the anterior part of the adductor muscle than on the left. The pericardium is large enough to accommodate the heart and to retain a supply of the fluid in which the heart is bathed. The volume of the pericardium can be measured by the following method. A solution of plastic or a thin mixture of plaster of paris is poured into the pericardium from which the heart has been removed; after the material has set, the plaster molds are waterproofed by immersing them in a hot mixture of beeswax, rosin, and turpentine. The volumes are measured by displacement. In an adult *Crassostrea virginica* about 12 to 14 cm. in height, the capacity of the pericardium varied from 2.4 to 2.7 ml.; approximately the same volume of blood and pericardial fluid could be withdrawn from the cavity by hypodermic syringe.

Two reno-pericardial canals open on the right and left side of the ventro-posterior wall of the pericardium and provide direct communication with the excretory system (see: ch. XII). The wall of the pericardium is formed of connective tissue similar to that in the mantle; the tissue is well supplied with blood vessels, blood sinuses (figs. 211 and 212), and branches of the cardiac nerve (fig. 213). The epithelium lining of the side

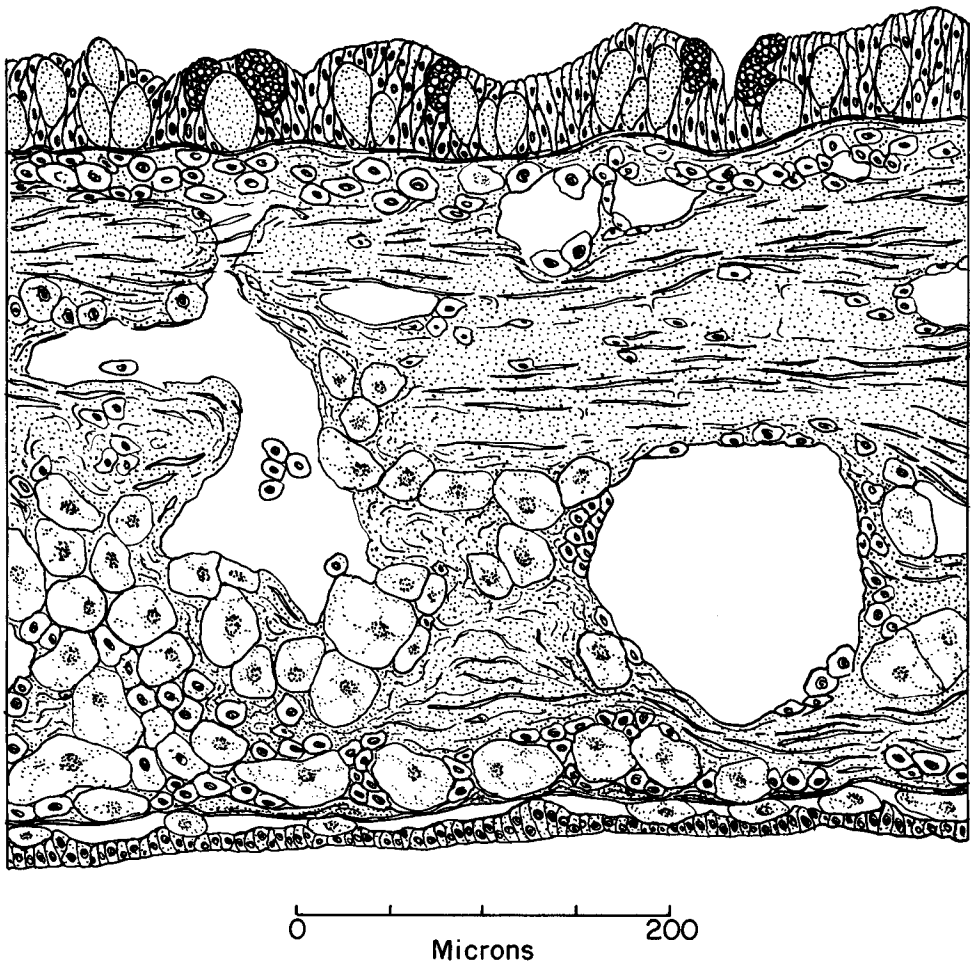

FIGURE 211.—Transverse section of the pericardium wall of *C. virginica*. Surface epithelium is rich in mucous (light) and eosinophilic cells (dark granules). Large vein (right) and blood sinus (left). The epithelium of the inner sides (lower side of the drawing) faces the heart. Bouin, Mallory triple stain.

facing the heart consists of small flattened cells and a few scattered eosinophilic and mucous cells; on the opposite side, facing the shell, the pericardium wall is covered with large columnar epithelial cells with oval nuclei and many eosinophilic and mucous cells. Basal membrane on the upper side of the wall is well developed.

THE HEART

The three-chambered heart is suspended obliquely in the pericardium and is held by the root of the aorta on one side and by the common efferent veins on the other. The ventricle is larger and bulkier than the two auricles; a constriction between the ventricle and auricles marks the partitition between them (fig. 214). The auricles are darkened by pigment cells in their walls. The degree of pigmentation varies from light brown to almost black. The ventricle is a pear-shaped structure slightly constricted along the middle. Its walls are formed by thick bundles of nonstriated muscle fibers which traverse the ventricular cavity and incompletely divide it into two chambers.

In the majority of bivalves the rectum passes through the heart, but in the oyster the rectum lies behind the heart (fig. 71).

The fibers of the heart muscle cross one another in many directions, frequently branch and anastomose, and are surrounded by delicate connective tissue. In general the muscle tissue has a spongy appearance (fig. 215). In the ventricle the muscle fibers are thicker and stronger than in the auricles.

The wall of the ventricle and the septum between the two parts of the heart are formed by a

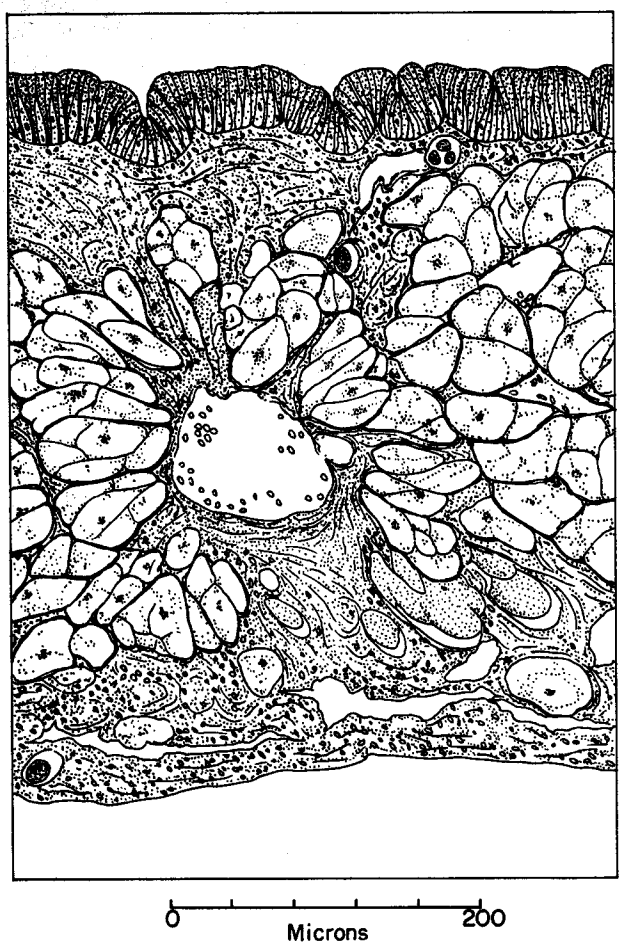

FIGURE 212.—Transverse section of a portion of the pericardium wall of *C. virginica* with an artery surrounded by large vesicular cells. NEMATOPSIS cysts on upper right and lower left sides. Bouin, hematoxylin-eosin.

framework of muscle fibers and connective tissue cells forming an irregular trabecular structure (fig. 216), with amoebocytes in the spaces between the fibers and in the connective tissue. The outer surface of the ventricle is covered with epithelium of a single layer of flat and thin cells with conspicuous nuclei.

The walls of the auricles, thinner and lighter than those of the ventricle, also form a trabecular framework supported by connective tissue (fig. 217). Amoebocytes are numerous between the connective tissue cells and along the muscle fibers. On the outside the auricles are covered with tall columnar epithelium which contains many glandular and dark pigment cells; this epithelium constitutes a part of the excretory system in bivalves (Franc, 1960, p. 2016). Neither the ventricle nor the auricles has an inner epithelial lining.

The movement of blood from the auricles to the ventricle is controlled by the two auriculo-ventricular valves which appear as circular bands of tissue surrounding small openings (fig. 218). In longitudinal section the auriculo-ventricular valve (fig. 219) resembles a convoluted cylindrical tube. The walls of the valves consist of several layers of muscle fibers arranged obliquely and supported by connective tissue. When the auricle (left part of fig. 219) contracts, blood is propelled into the ventricle (right portion of the figure), which in turn contracts, compressing the walls of the valves and forcing the blood forward into the aorta (not shown in fig. 219).

The heart is well supplied with ganglion cells and nerve fibers which end in the muscles. Preparations of heart tissue of *C. virginica* stained with methylene blue and examined in glycerin under oil immersion showed a great abundance of these elements (fig. 220). These observations support the findings of Suzuki (1934a, 1934b), who described the ganglion cells in the hearts of *Ostrea circumpicta* Pils., *O. gigas* Thunb., and *Pinctada martensi*. According to his data, the ganglion cells in these oysters are particularly abundant at the septum separating the auricles from the ventricle where they form a ring at the narrowest portion of the heart. Direct con-

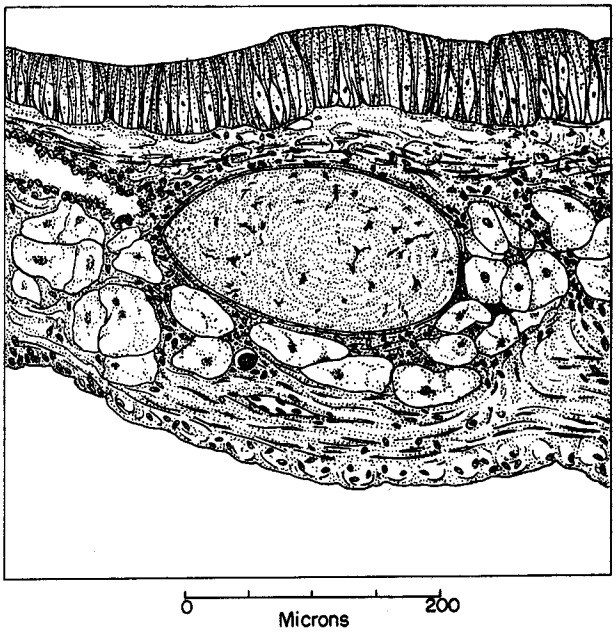

FIGURE 213.—Transverse section of the pericardium wall of *C. virginica* with the branch of the cardial nerve (cut at a slightly slanted angle). Bouin, hematoxylin-eosin.

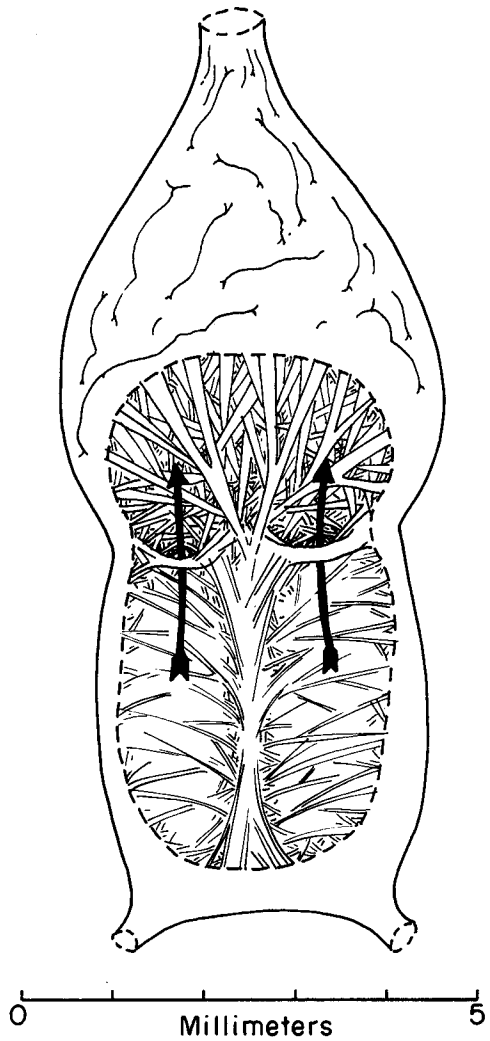

FIGURE 214.—Heart of the oyster *C. virginica* viewed from the ventro-anterior side. Part of the heart's wall was removed to show the auriculo-ventricular septum and the musculature of the heart. Upper part—ventricle and root of the aorta; lower part—two auricles and common efferent veins. Drawn from an unpreserved preparation.

nections between the nerve cells scattered in the heart muscle and nerve fibers entering the heart have not been demonstrated.

A summary of the results of many investigations of the innervation of the bivalve heart was given by Esser (1934), who denied the existence of the cardial ganglia in the heart of *Anodonta cygnea* and stated that the so-called nerve cells of the mollusk's myocardium have none of the typical features of the nerve cells. He thought that these cells were identical with certain amoebocytes of the blood of *Anodonta*. It is true that the amoebocytes found in the heart muscle of *C. virginica* have a certain similarity to the cells depicted by Esser. In structure and in general outline they differ, however, from the nerve cells and can be recognized in the preparations stained with methylene blue. Under high magnification the ganglia cells in the myocardium of *C. virginica* appear to be oval-shaped and bipolar (fig. 221) rather than unipolar as described by Suzuki (1934a) for *O. circumpicta*. Their cytoplasm contains granules deeply stained with methylene blue. Round granules of larger size distributed along the axis of the nerve are visible in vitally stained preparations (fig. 220). Similar structures are shown by Suzuki in his figure 4 (1934b) of the preparation of the heart muscle of the Japanese oyster (*C. gigas* and *O. circumpicta*). The nature of the granules is not known.

PHYSIOLOGY OF THE HEART

Contributions to the study of the physiology of the heart of bivalves have been made by Carlson in a series of papers published during the years 1903–09 (Carlson, 1903, 1905a, 1905b, 1905c, 1905d, 1906a, 1906b, 1906c, 1906d, 1907, 1909); by Ten Cate (1923a, 1923b, 1923c, 1929); Jullien (1935a, 1935b, 1935c, 1935d, 1936a, 1936b, 1936c); Jullien and Morin (1930, 1931a, 1931b); Jullien and Vincent (1938); Jullien, Vincent, Bouchet, and Vuillet (1938); Jullien, Vincent, Vuillet, and Bouchet (1939); Takatsuki (1927, 1929, 1933, 1934a, 1934b); Oka (1932); Suzuki (1934a, 1934b); Prosser (1940, 1942); and many others. The literature up to 1933 is adequately reviewed by Dubuisson (1933), and more recent investigations are summarized by Krijgsman and Divaris (1955). The studies cited above were made primarily on the fresh-water mussel *Anodonta*, on *Mytilus*, *Pecten*, and *Mya*. A relatively small number of observations were made on oyster heart.

AUTOMATISM OF HEART BEAT

Most of the experimental work on bivalve hearts has been done with excised preparations of the organ kept in a perfusion chamber supplied with the van't Hoff or Ringer solutions or with natural sea water. Few observations were made on the heart in situ.

An automatic rhythmical beating of the excised oyster heart continues for a long time if the heart is kept in an isotonic solution, preferably in sea water, at normal pH of about 8.0 or in the pericardial fluid, and the heart muscle is slightly

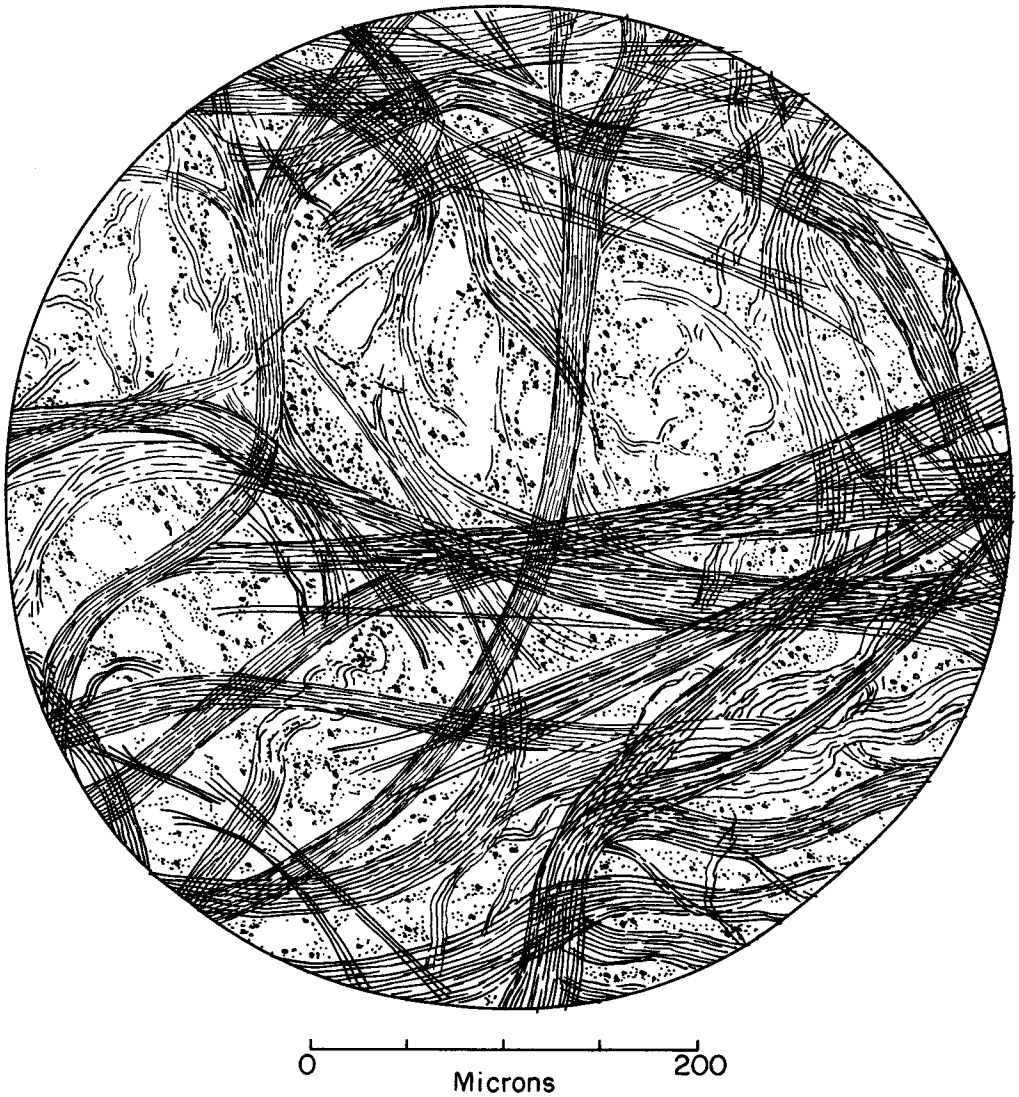

FIGURE 215.—Small piece of heart wall of *C. virginica* showing spongy appearance of muscles. Slightly compressed whole mount. Formalin, 5 percent, hematoxylin-eosin.

stretched by the pull of a light lever to which the aorta end of the ventricle is attached; the opposite end of the ventricle is tied to an immobilized glass rod. Gentle stretching is sufficient to provide the necessary stimulus. Takatsuki (1927) claimed that under these conditions the isolated heart of the Japanese oyster, *O. circumpicta*, may remain active for 16 days. Observations in the Woods Hole laboratory show that the excised hearts of *C. virginica* kept in sea water at room temperature continued to beat for 2 to 3 days, but the frequency and the amplitude of beat decreased noticeably after the first 24 hours.

The molluscan heart functions as a pressure pump which must develop considerable power to propel the blood through the circulatory system. The mechanical force during the systole is produced by the contraction of a trabecular wall made of many anastomosing fibers. This arrangement, also present in *O. edulis* (Jullien, 1935b), is shown in figures 214 and 215.

In a number of bivalves (*Anodonta, Mytilus, Ostrea*) the peristaltic wave in the ventricle starts at the posterior end and progresses forward (DeBoer, 1929; Ten Cate, 1923a, 1923b, 1923c). The contraction of the ventricle compresses the auriculo-ventricular valves (fig. 218) and prevents the reflux of blood into the auricles. There is an interval between the contractions of the ventricle and auricles which may be noticed by visual

FIGURE 216.—Cross section through auriculo-ventricular septum of *C. virginica*. Formalin 5 percent, hematoxylin-eosin.

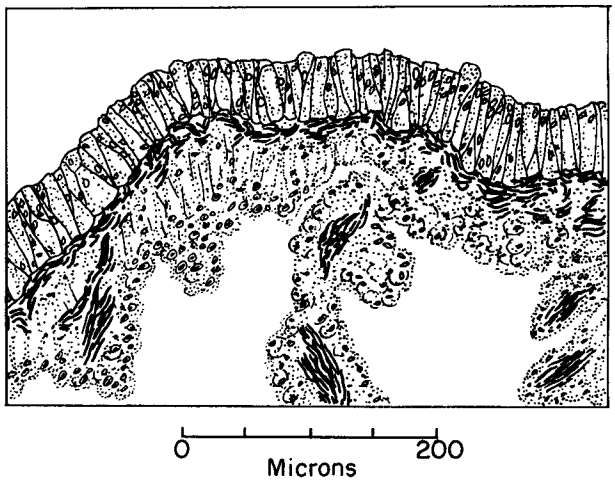

FIGURE 217.—Cross section of the wall of the auricle of *C. virginica*. Outside wall is covered with glandular epithelium. Bouin, hematoxylin-eosin.

inspection. The electrocardiogram of the oyster heart (*O. edulis*) published by Eiger (1913) shows that the interval is about 0.5 second. A similar condition in the heart of *C. virginica* was demonstrated on an electrocardiogram (fig. 222) made in the Bureau's shellfish laboratory by removing part of one valve and placing the electrodes on the pericardium wall and on the adjacent tissues. Action currents observed by Taylor and Walzl (1941) in the ventricle of the excised heart of *C. virginica* consist, according to their interpretation, of two components, a major diphasic wave preceding the contraction, and a slow wave at the time of contraction.

The refilling of the heart during the diastolic phase is dependent on pressure mechanism in the pericardium. Krijgsman and Divaris (1955) propose the following probable explanation which requires further corroboration. The change in the hydrostatic pressure in the pericardial chamber, caused by systolic contraction, is compensated by the expansion of the auricles. At the moment the ventricle starts to contract it exerts a suction which brings in blood through the reno-pericardial canal and venous system. Thus, the contraction of the ventricle automatically results in the expansion of the auricles. This interesting hypothesis may be corroborated by observations on hydrostatic pressure inside the heart and in the pericardial cavity and by motion pictures of the sequences of ventricular and auricular beat. To my knowledge these have not yet been made.

Observations on bivalve hearts in situ show that the ventricle and auricles alternately increase in size while they are being filled with blood. Both auricles of the oyster heart contract simultaneously (Skramlik, 1929).

Experimental evidence indicates that the autom-

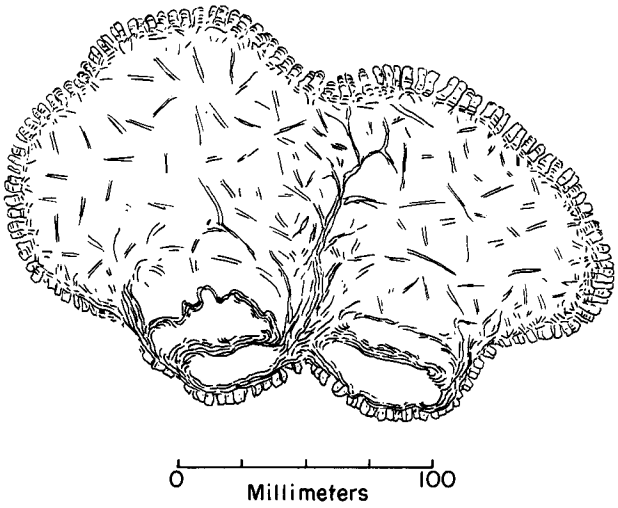

FIGURE 218.—Cross section of the heart at the auriculo-ventricular valves of *C. virginica*. Bouin, hematoxylin-eosin.

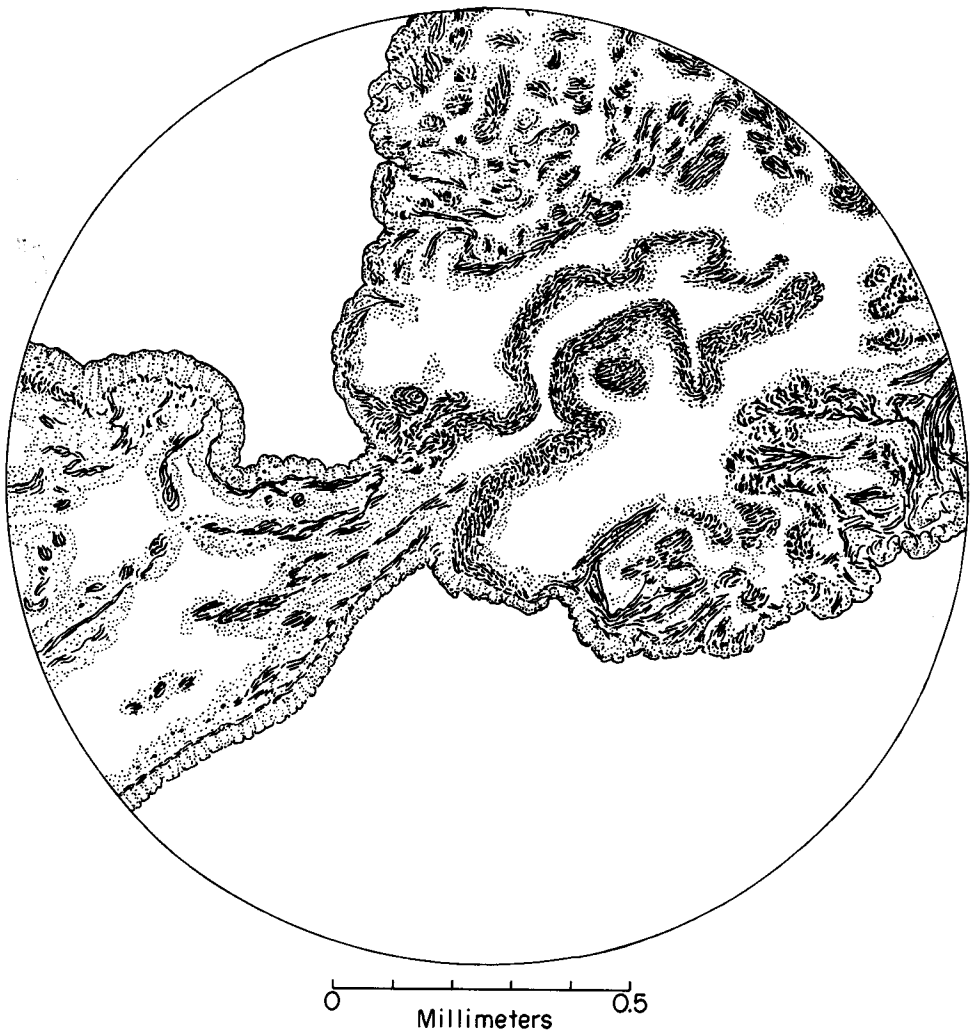

FIGURE 219.—Auriculo-ventricular valve of *C. virginica* seen in longitudinal section. Auricle on the left. Bouin, hematoxylin-eosin.

atism of the bivalve heart is of diffuse nature. Berthe and Petitfrère (1934a, 1934b) showed that contractions of the heart of *Anodonta* originate at any point of the ventricle whether it is observed in situ, or on isolated and even sectioned pieces. In these studies the authors used optical methods to record the beats of the hearts, which were fully submerged in Ringer solution or in *Anodonta* blood and were not stretched by writing levers. They found that such distension of the ventricle removed the asynchronism in automatic activity, increased the amplitude of the contraction, and diminished the rhythm. Jullien and Morin (1931a) reported that the pulsations in dissected strips of heart muscles of *O. edulis* continue for some time. One may conclude that the hearts of the oyster and other bivalve mollusks are myogenic, i.e., their intrinsic automatism originates in the muscular tissue. In the myogenic hearts of bivalves the beat can start at any point and the contraction can be local or involve the entire organ (Berthe and Petitfrère, 1934b). This type of activity differs from that of the neurogenic hearts, such as those of arthropods, in which the excitation wave of the beat originates from the nerve cells of the ganglia.

THE PACEMAKER SYSTEM

We know that the rhythmic activity of the hearts of bivalves originates in the heart itself and is not provoked by impulses from the central nervous system. Whether this automatism is produced by localized pacemakers or is a general property of all muscle fibers has not been adequate-

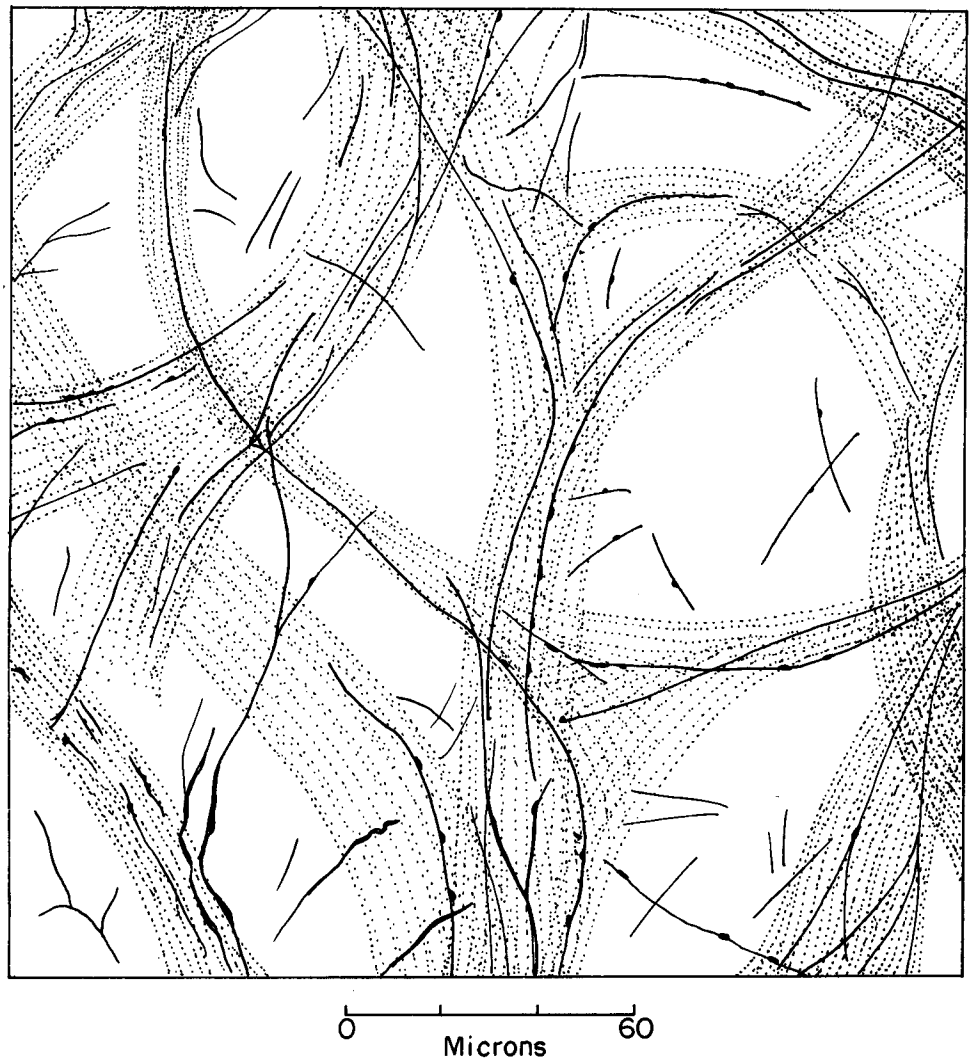

FIGURE 220.—Nerves in the heart muscle of *C. virginica* vitally stained in methylene blue. Glycerin-jelly.

ly studied. The presence of nerve cells in the heart has been confirmed for many bivalves, gastropods, nudibranchs, and cephalopods (Dogiel, 1877; Suzuki, 1934a, 1934b; Dubuisson, 1933). On the other hand several investigators deny the presence of nerve cells in the heart of mollusks and consider that connective tissue cells were mistakenly described as nerve cells (Krijgsman and Divaris, 1955). Motley (1933), Esser (1934), and Prosser (1940, 1942) were unable to find them in *Anodonta* and *Venus*. Inconsistencies in the results are probably due to the uncertainties encountered in staining nervous elements of the heart with the usual histological technique and frequent failures in using some brands of methylene blue.

It is known that in *Anodonta* and *Mytilus* the wave of ventricular contraction starts at the posterior end. Furthermore, by applying heating to various places of the hearts of *Anodonta*, *Unio*, and *Mytilus* DeBoer (1929) was able to show that warming the posterior part of the ventricle increases the beat frequency, whereas the heating of the anterior part has no effect (Krijgsman and Divaris, 1955). In the heart of a dying oyster (*O. edulis*), the aortic region continues to beat for a longer time than do the other parts of the organ; the isolated hearts seldom beat if the aorta is completely cut off from the preparation (Jullien and Morin, 1931a). This is also true for the longitudinal fragments of the heart, which continue to beat if they contain a piece of aorta. These observations seem to support the opinion that in most cases the bivalve heart possesses a diffuse myogenic pacemaker.

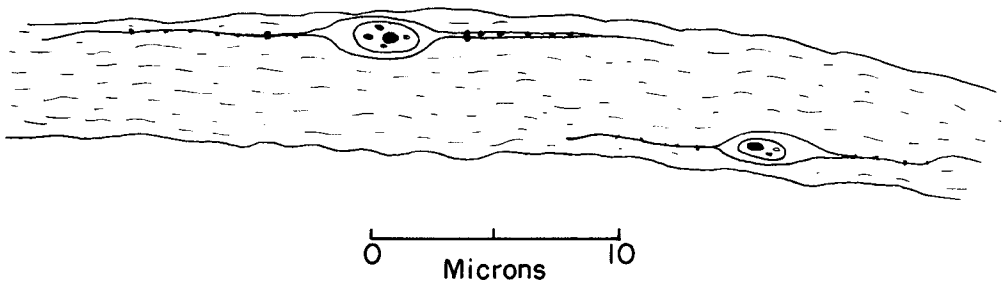

FIGURE 221.—Nerve cells in the heart muscle fiber of *C. virginica*. Methylene blue vital stain.

Pharmacological evidence of the effect of drugs on heart, described later (p. 252), and particularly the action of acetylcholine and the antagonism of curare to acethycholine, support the view that the pacemaker system in the oyster heart is of a diffuse myogenic nature.

METHODS OF STUDY OF HEART BEAT

In order to count the number of beats per unit of time a portion of the left valve must be removed without injury to the adductor muscle and the underlying tissue. The oyster is then kept in sea water at constant temperature, and the number of beats is recorded. The method was used by Federighi (1929) and by Koehring (1937), who drilled a small round window in the valve and with sharp scissors dissected the pericardium to expose the heart. These oysters lived for several weeks in running sea water in the laboratory of the Bureau of Commercial Fisheries at Woods Hole without noticeable ill effects.

Stauber (1940) modified the technique by cutting windows in both valves without injury to the pericardium wall and cementing them over with pieces of glass or cellophane. For observation the operated oysters were illuminated from underneath. In a few days both were covered by new shell and had to be replaced. Shell material that covered the window of the left side, where the pericardium wall touched the valve, probably spread from the adjacent areas of the mantle.

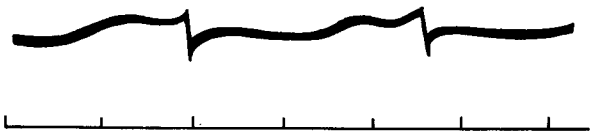

FIGURE 222.—Electrocardiogram of *C. virginica* taken in situ. A gentle wave corresponding to auricular contraction A precedes by approximately one-half second the contraction of the ventricle. Temperature 22.6 °C. Time intervals, 1 second.

Pulse records can be obtained without touching the heart itself by removing a portion of the valve, using the pericardium wall as a sphygmograph tambour, and providing a small stand made of light plastic to support one arm of the writing lever. The disadvantage of this method used in the shellfish laboratory at Woods Hole was that the heart became fatigued after several hours of recording.

There is another technique to study heart contraction in situ. The pericardium wall is exposed by cutting off the valve above the adductor muscle. A small S-shaped glass hook connecting the heart with the kymograph lever is placed under the auriculo-ventricular junction or under the ventricle. A silk thread tied to the upper part of the hook is connected to a writing lever, which is carefully balanced so that the tension on the heart does not exceed 100 mg. Care must be taken to adjust the tension so that the pull of the hook will not displace the heart from its normal position (fig. 223).

There will be a minimum of damage to the nervous system and adjacent organs if only part of the valve between the adductor muscle and the hinge is removed. This leaves the muscle itself intact, and only the pericardium wall is dissected to expose the heart. The oyster is kept in a known volume of water in a finger bowl, which is placed in a large crystallizing dish to permit the rapid change of water or of experimental solution without disturbing the setup. Temperature in the larger dish (not shown in figure 223) is thermostatically controlled at any desired degree. Under such conditions the beating of the heart continues for about 2 days.

The perfusion chamber method is frequently employed (fig. 224) in the pharmacological studies of the effects of drugs on bivalve hearts. In this method the heart is cut off at the levels of the auricles and the aorta, ligatures are applied at

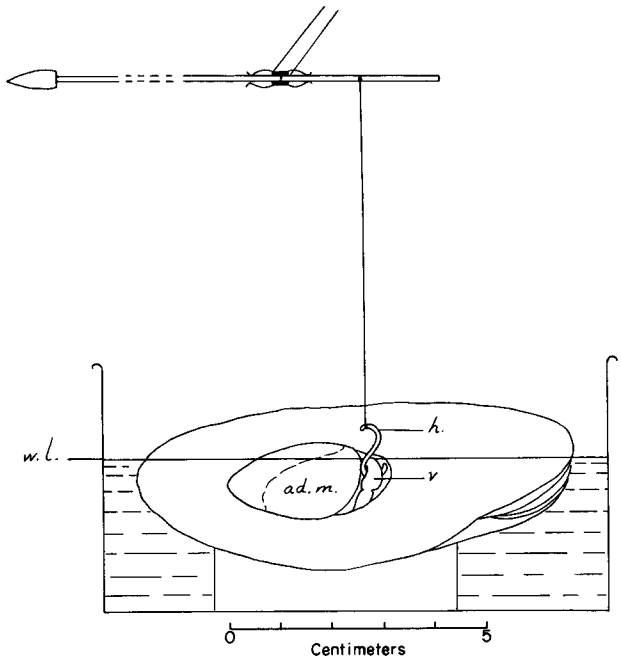

FIGURE 223.—Method of obtaining tracings of oyster heart in situ. ad.m.—adductor muscle; h.—glass hook under the ventricle, V; w.l.—water level. The upper valve has been removed, the pericardium dissected, and the oyster placed on a suitable base in a finger bowl.

both ends and the organ is placed in the perfusion chamber filled with sea water or with Ringer solution. The aorta end of the heart is connected to the writing lever, and the auricular end is attached to the base. The chamber is a glass tube about 2 cm. in diameter with an overflow arm near the top (fig. 224). The length of the tube may be adjusted to obtain the desired volume, usually 10 or 20 ml., between the bottom and the overflow. The liquid (perfusate) is delivered through an inlet A at the bottom; it fills the chamber to the level of the overflow and runs out through outlet B. The preparation may be aerated through a second glass tubing inserted in the bottom. Under this condition the heart remains alive and active for several days.

A very delicate technique to study the nerves which stimulate the oyster heart (*O. circumpicta*) was developed by Oka (1932). The preparation was made in the following manner: the shell was carefully cut off without any injury to the pericardial region and visceral ganglion; the greater part of the gills with the mantle were removed; the adductor muscle was dissected; and the oyster was fastened to a small board in the manner shown in figure 225. In this way the visceral ganglion with its nervous connection and the heart were exposed and made accessible for stimulation. The heart was kept in water, but the ganglion was exposed to air. The rhythm was recorded for the heart in situ and separately for the ventricle and two auricles. For the latter purpose the heart was cut at the auriculo-ventricular junction and the cut end tied with a silk thread. The free end was connected to a writing lever of a kymograph (upper right part of figure 225).

FREQUENCY OF BEAT

The heart beat of all bivalves is so greatly affected by the environment that reports of the rates of beat are of little value unless the conditions under which the observations were made are completely and accurately described. Frequency of heart beat increases with the rise of temperature and decreases with its fall. According to Federighi (1929), the response follows Arrhenius equation from which the so-called temperature coefficient (designated as μ) can be calculated, using the technique developed by Crozier. Discussion of temperature characteristics of biological processes in general and the application of the Arrhenius equation of the effect of temperature on chemical reactions to heart physiology is beyond the scope of this book. The reader interested in the problem is referred to Barnes' (1937) Textbook of general physiology, chapter XIII, or to chapter I in Crozier and Hoagland's (1934) Handbook of general experimental psychology. There is, however, serious reason to question the validity of

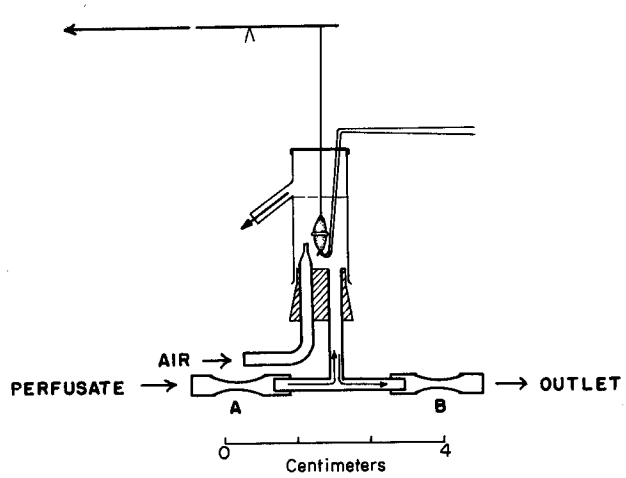

FIGURE 224.—Wait's perfusion chamber for recording the activity of an excised heart of mollusks. From Wait, 1943.